USER AND MAINTENANCE MANUAL

Wheelchair for the disabled – mod. O wheel®

Ver.1.0 – Last issue date: 18/05/2021

Api Editrici S.r.l.

Headquarters: Via Michelangelo Buonarroti, 6 – 20051 – Cassina De' Pecchi (MI)

Tel.: +39-3421168712

Mail: cesare.salgaro@lapalestra.it

Site: https://owheel.net/

Index

Section 1 ..... **3**
Thanks **4**
DECLARATION OF CONFORMITY **4**
MANUFACTURER DATA **4**
AUTHORIZED ASSISTANCE **4**
MANUAL INTRODUCTION **5**
Conventions 6
Pictograms 6
Medical symbols 7
Section 2 ..... **8**
WARRANTY **9**
NOTICE **9**
Safety rules 10
GENERAL DESCRIPTION AND TECHNICAL DATA **11**
General description 11
Technical data 12
Limitations of the medical device 13
Contraindications 13
Side effects 13
Identification plates 14
INTENDED USE AND NOT INTENDED USE **14**
Unintended use 14
RESIDUAL RISKS **15**
Section 3 ..... **16**
HANDLING **17**
Moving the medical device 17
Manual handling 17
CONFIGURATION **17**
Warning 17
Locations 18
USE **18**
Precautions 18
Chair details 19
Use procedure 20
Section 5 ..... **23**
MAINTENANCE **24**
Safety 24
Periodic maintenance 24
Extraordinary maintenance 24
PUTTING OUT OF SERVICE and DISPOSAL **25**
Disposal of packaging 25
Disposal 25

Section 1

Definitions
Declaration of conformity
Manufacturer's data
Documentation information

Thanks

Dear Customer,

First of all, we would like to congratulate you on your choice and thank you very much for the trust you have shown. This is a well-placed trust, because the very high technological level and the quality of the materials ensure the perfect functioning of the O wheel® wheelchair you have purchased.

Our organization also allows us to guarantee our customers a continuous and accurate assistance and maintenance service.

Read the use and maintenance manual carefully, carefully follow the instructions contained therein, in order to obtain the maximum result in safety and durability of the O wheel® wheelchair over time.

Also listed are all the procedures useful for dealing with any reasonably foreseeable emergency situations that may occur during use.

DECLARATION OF CONFORMITY

The O wheel® wheelchair is accompanied by the declaration of conformity drawn up in accordance with the laws in force in the European territory.

NOTE

BEFORE USING THE MEDICAL DEVICE IN ANY FORM, CHECK THE PRESENCE OF THE DECLARATION OF CONFORMITY.

NOTE

IF THE MEDICAL DEVICE IS GIVEN TO A THIRD PARTY, ALL DOCUMENTATION MUST BE DELIVERED TOGETHER.

MANUFACTURER DATA

Company name	Api Editrici S.r.l.
Company headquarters	Via Michelangelo Buonarroti, 6 – 20051 – Cassina De' Pecchi (MI)
VAT number	6033380962
PEC	apieditrici@pec.it
Tel	+39-3421168712
E-mail	cesare.salgaro@lapalestra.it
Website	https://owheel.net/

AUTHORIZED ASSISTANCE

Technical assistance can only be performed by the manufacturer or by a technician appointed by the same.

MANUAL INTRODUCTION

NOTE

ON RECEIVING THE MEDICAL DEVICE, BEFORE PERFORMING ANY OPERATION OF USE, CAREFULLY SEE ALL THE DOCUMENTATIONS INDICATED IN THE PREVIOUS PARAGRAPH.

This manual contains instructions for handling, use and maintenance of the wheelchair mod. O wheel®.

The manual is made up of various sections, each of which deals with a series of topics, divided into chapters and paragraphs. The general index lists all the topics covered in the entire manual.

The numbering of the pages is progressive and each page shows the number of the same. This manual is intended for personnel in charge of handling, use and maintenance of the O wheel® wheelchair and relates to its technical life after its production, use and eventual sale.

In the event that it is subsequently transferred to third parties for any reason (sale, loan for use, or any other reason), the O wheel® wheelchair must be delivered complete with all documentation.

The information contained in this manual cannot replace the knowledge and experience of those who will use the O wheel® wheelchair (in any form), who in any case have exclusive responsibility for the use for which it was designed.

Before starting any operation on any unit of the O wheel® wheelchair, it is necessary to have at least read the entire manual and then deepen the topic relating to the operations to be carried out.

This manual contains proprietary information and cannot even be partially provided to third parties for any use and in any form, without the prior written consent of the company **Api Editrici S.r.l..**

Api Editrici S.r.l. declares that the information contained in this manual is congruent with the technical and safety specifications of the O wheel® wheelchair to which the manual refers.

A certified copy of this manual is deposited in the technical file of the O wheel® wheelchair, kept at the company Api Editrici S.r.l ..

Api Editrici S.r.l. does not recognize any documentation that has not been produced, issued or distributed by itself or by its authorized representative.

This manual, as well as the entire technical file, will be kept by the manufacturer for the period required by law.

During this period, a copy of the documentation accompanying the product may be requested at the time of sale.

The entire technical file remains available for this period exclusively for the supervisory authorities, who may request a copy.

After this period, it will be the obligation and care of whoever manages the product to make sure that both the product and the documentation comply with the laws in force at the time of the inspection.

Conventions

In order to obtain a more immediate understanding of the topics, the graphic and typographic symbols and conventions described below have been adopted in the manual.

Graphic warning conventions

NOTE

NOTES CONTAIN IMPORTANT INFORMATION, HIGHLIGHTED OUTSIDE THE TEXT TO WHICH THEY REFER

ATTENTION

ATTENTION INDICATIONS INDICATE THOSE PROCEDURES WHICH TOTAL OR PARTIAL NON-COMPLIANCE MAY CAUSE DAMAGE TO THE MEDICAL DEVICE, ITS COMPONENTS AND MAY EXPOSE A PERSON TO MINOR AND MEDIUM ENTITY HAZARDS.

DANGER

DANGER INDICATIONS INDICATE THOSE PROCEDURES WHICH TOTAL OR PARTIAL NON-COMPLIANCE MAY CAUSE SERIOUS DAMAGE OR INJURY TO THE HEALTH OF THE USER, OTHER PEOPLE IN THE VICINITY AND SERIOUS DAMAGE TO THE MEDICAL DEVICE..

Pictograms

The medical device contains the following pictograms:

Danger

Hand Crushing Hazard

Generic Hazard

ATTENTION!
Pictograms that perform a safety function must not be removed, covered or damaged.

Medical symbols

	Lot number
	Manufacturing date
	Manufacturer
	CE mark
	Protect the medical device from humidity and atmospheric agents
	Storage temperature of the medical device
	Protect from direct sunlight

Section 2

Warranty
General safety rules
General description and technical data
Safety devices
Intended and unintended use

WARRANTY

The warranty rules, listed in full in the purchase contract, are valid only if the O wheel® wheelchair is used in the conditions of intended use. With the exception of the maintenance operations described in **sect. MAINTENANCE** and performed with the indicated procedures, any repair or modification made to the O wheel® wheelchair by the user or by unauthorized companies will invalidate the warranty. The warranty does not extend to damage caused by inexperience or negligence in the use of the O wheel®, or by poor or omitted maintenance.

The products we sell are covered by a guarantee with regard to the following conditions:	
1	*The warranty is valid for a period of twelve (12) months for the chair.*
2	*The manufacturing company undertakes to replace at its own discretion the malfunctioning or incorrectly manufactured parts, only after careful control and verification of bad construction.*
3	*The transport and / or shipping costs are always borne by the buyer.*
4	*During the warranty period the replaced products become the property of the manufacturer.*
5	*Only the original purchaser who has complied with the instructions for normal maintenance contained in the manual can benefit from this guarantee. Our warranty liability expires when: the original owner relinquishes ownership of the product, or changes have been made to the product.*
6	*The warranty does not include damage resulting from excessive stress such as, for example, using the product after a fault has been ascertained, the use of unsuitable operating methods as well as failure to observe the instructions for use and maintenance.*
7	*The manufacturer assumes no responsibility for any difficulties that may arise in resale or use abroad due to the provisions in force in the country where the product was sold.*
8	*The product part of the defective product must be delivered to the manufacturer for replacement; otherwise, the replaced part will be charged to the buyer.*
9	*The Company does not guarantee the product against damage or defects in the following conditions: natural disasters, unauthorized maintenance or repair operations, use of parts or components not supplied by the Company, failure to comply with the guidelines and instructions for use, modifications unauthorized, shipping damage (other than shipping made by the manufacturer) or failure to perform maintenance as indicated in the manual.*
10	*Worn components are not covered by warranty if the damage is attributable to normal use of the product*

Notice: *if it is deemed necessary to use the guarantee, please indicate the following data:*

1	*Typology*
2	*Purchase date (presentation of the purchase document)*
3	*Detailed description of the problem*

NOTE

FAILURE TO COMPLY WITH THE METHODS OF INTERVENTION AND USE OF THE MEDICAL DEVICE DESCRIBED IN THIS DOCUMENTATION WILL INVOLVE THE WARRANTY TERMS.

NOTICE

If part of the documentation is even partially illegible, consult the manufacturer before carrying out any further operation on the medical device.

The personnel assigned to the use and maintenance of the O wheel® wheelchair must read this document, paying particular attention to the general safety rules and methods of execution contained in the sections relating to the operations under their responsibility.

This chapter describes the general safety rules to be observed during any operation carried out with the product. The intervention procedures, described in the following chapters, must be carried out in compliance with both the methods of execution indicated and the general safety rules of this chapter.

The safety rules and the use and maintenance procedures of this documentation can also be a complement to the general workplace safety rules that must ALWAYS be respected when the medical device is used in professional environments.

Different industries or countries may have different safety regulations. It is therefore specified that in all cases in which the rules of the manuals are in conflict or reductive with respect to the rules of the sector or of the country in which the medical device is used, the rules of the sector or of the nation will have priority over those of the manuals.

NOTE

THE MANUFACTURER CANNOT BE HELD IN ANY CASE LIABLE FOR ACCIDENTS OR DAMAGES CONSEQUENTIAL TO THE USE OF THE MEDICAL DEVICE BY PERSONS NOT SUFFICIENTLY INSTRUCTED AND DELEGATED OR WHO HAS MADE IT INAPPROPRIATE EVEN IN SAFE AND INTERVENTION PROCEDURES DESCRIBED IN THE DOCUMENTATION.

Failure to comply with the rules of use and the methods of intervention contained in the documentation also causes the warranty terms to lapse.

Safety rules

During the use of the O wheel® wheelchair, incorrect operating situations not provided for in the manuals may occur. These completely anomalous situations can sometimes be caused by environmental factors or by fortuitous failures not foreseeable by the manufacturer.

If you encounter problems of any kind, which are not reflected in this document, contact the manufacturer to receive technical assistance.

If you believe you need to perform an operation or an intervention that is not foreseen by following a procedure other than those indicated in the documentation of the O wheel® wheelchair, before proceeding consult the customer service to verify its feasibility.

The manual must be kept with care. In the event of damage or loss, it may be requested by the Customer from the security service of the **Api Editrici S.r.l.** a certified copy.

To prevent dangerous situations it is necessary that all users destined and authorized to use the O wheel® wheelchair read this manual carefully, making sure they understand the methods of use and intervention before starting to use it in any form. If the instructions for use are difficult and incomprehensible, contact the manufacturer to receive all the necessary assistance.

GENERAL DESCRIPTION AND TECHNICAL DATA

General description

The O wheel® wheelchair has been designed to help all professionals who work with people with disabilities by providing their center (gym, hotel, rehabilitation centers, hospitals, etc.) with a useful tool to allow the customer to be able to do exercises with different machines gym professionals.

O wheel® is therefore not a classic wheelchair for private use, but a professional tool designed to be left available to the customer within the center. Each exercise that the user does with O wheel® must be strictly followed by room staff.

Training without barriers

The special O wheel® wheelchair allows disabled people to train using the common machines found in gyms, hotels, and all rehabilitation centers.

Inaccessible facilities

The real deterrent to disability lies in enhancing what is available. A disabled person, whether an athlete or a simple enthusiast, often needs more than others to strengthen their body. Unfortunately, not all clubs, hotels and places for physical activity are suitable for receiving this type of clientele.

Innovative Design

Thanks to its innovative design all made in Italy and registered with the European Union,
O wheel® allows disabled people to carry out a series of exercises that until now were forbidden to them due to the structure of the equipment commonly found in the gym, in hotels and in most rehabilitation centers.

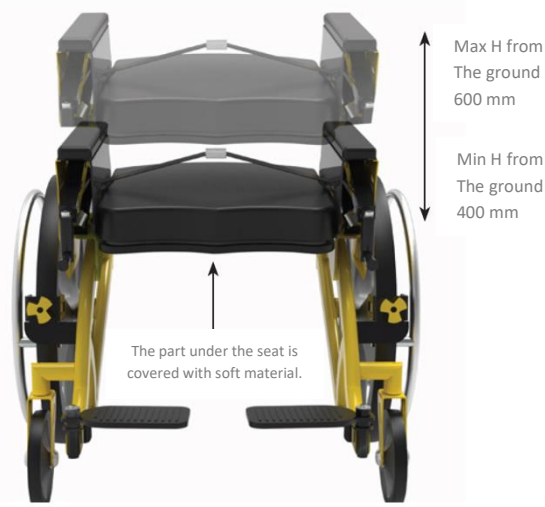

Compatibility

The O wheel® can therefore be used in synergy with many fitness machines currently on the market that have a height-adjustable backrest and seat.
It is essential to check the compatibility of the existing gym equipment before each use of the O wheel®.
The O wheel® manufacturer declines all responsibility for damage caused by the use of O wheel® on existing machinery.

Adjustable

The part under the seat is completely free from obstacles and thanks to special cranks placed on the front, it is possible to adjust the seat from a minimum height of 40 cm to a maximum of 60 cm. The part under the seat is covered with soft material so as not to damage the seat of the gym machine.

Weight and safety

The O wheel® with its weight of 65 kg it is a stable and safe tool for any type of exercise.

New opportunities

The O wheel® aims to help people with disabilities to use machines to which until now they had no access, but also to give owners of gyms, sports centers, hotels, hospitals, rehabilitation centers an opportunity to an extra entry, involving new customers.

This wheelchair is indicated in case of inability or severe limitation in walking, due to:

- paralysis
- loss of lower limbs
- malformation or deformation of the lower limbs
- contractures / joint damage
- other pathologies

It can be used to satisfy basic needs for which it is necessary to move within the structure to perform adapted physical activity exercises.

Risk class: class I medical device

Technical data

Mechanical data	
Dimensions	L 840 mm x P 760 mm x H 730 mm
Weight	70 kg
Maximum weight supported	120 kg
Structure material	FE S235JR steel
Seat, back and forearm positioner materials	Covered in leather
Rear wheels dimensions	22 inches
Front wheel size	7 inch
H min and max from the ground	400-600 mm
Other	Height adjustable seat

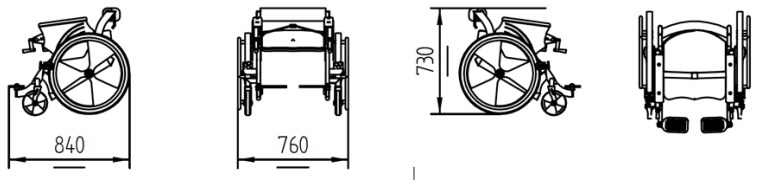

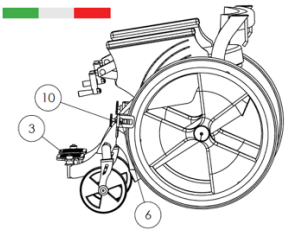

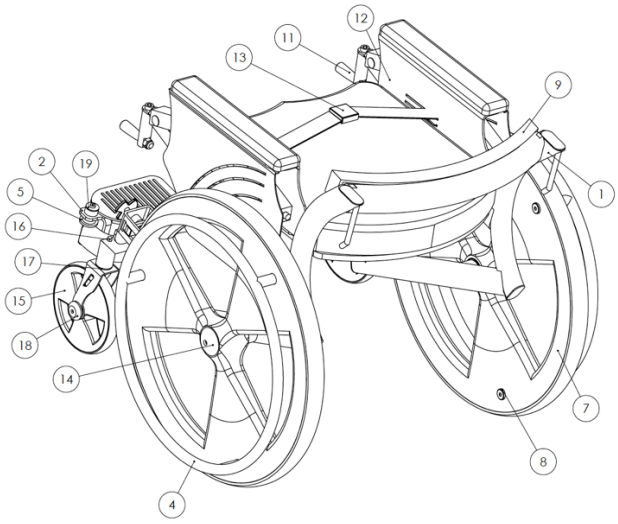

N.	N.SKETCH	QT.	TITLE
1	CS_CDP_002	1	WHEELCHAIR SUPPORT STRUCTURE
2	CS_ASS_0005_SX	1	FOOTREST
3	CS_ASS_0005_DX	1	FOOTREST
4	CS_ASS_0001	2	WHEELCHAIR CONTROL
5	CS_CDP_0009	2	SPACER
6	CS_CDP_0014_1	2	BUSH FOR BRAKES
7	CS_CDP_0001	2	REAR WHEEL
8	CS_CDP_0033	6	REAR WHEEL INTERNAL SPACER
9	CS_CDP_0051	1	BACK
10	CS_CDP_0014	2	BUSH FOR BRAKES WITH GRAIN
11	CS_CDP_0050	2	ADJUSTABLE HANDLE
12	CS_CDP_0004	1	SEAT BODY ASSEMBLY
13	CS_CDP_0036	1	GRACEME BELT 15-84 CM
14	CS_CDP_0033	2	REAR WHEEL COVER
15	CS_ASS_0003	2	FRONT WHEEL
16	CS_CDP_0016	2	FRONT WHEEL PIN
17	CS_CDP_0018	2	FRONT WHEEL WASHER
18	CS_CDP_0032	2	FRONT WHEEL COVER
19	CS_CDP_0032_1	2	UPPER WASHER

The product is sold in different variants with regard to some technical specifications. The O wheel® series has the following variants:

- colour
- additional backrest (optional)

Limitations of the medical device

- - The O wheel® chair can bear a maximum weight of 100 Kg. Once the indicated weight is exceeded, the product loses its properties and risks being permanently and irreversibly damaged.
- - Prolonged use of the D.M. with excessive weight leads to permanent alterations that make the properties of the device less and / or ineffective.
- - Prolonged use of the D.M. with excessive weight leads to breakage of the medical device and make it dangerous for the user.
- - The medical device does not cure any disease but it is an aid for those patients with mobility difficulties or invalids.

Contraindications

The O wheel® must not be used in the presence of:

- perception disturbances,
- severe disturbances in balance,
- loss of both arms,
- contractures / joint damage in both arms,
- inability to sit up
- reduced or insufficient visual faculty

Side effects

The side effects resulting from the use of the medical device are:

- Redness of the skin, if the patient is allergic to the material with which the seat is covered. In case, suspend use or interpose hypoallergenic material between patient and seat.
- Failure to use the restraint or use with a single operator driving the chair can cause the patient to fall.

NOTE

THE DATA CONCERNS THE MEDICAL DEVICE IN STANDARD CONFIGURATION. THE TECHNICAL DATA REPORTED ARE INDICATIVE. THE MANUFACTURER RESERVES THE RIGHT TO MODIFY THEM IF NECESSARY AND MAKE NOTES THE MODIFICATIONS.

Identification plates

An identification plate is applied to the O wheel® wheelchair bearing the identification details and the main technical data.

ATTENTION

TO SAFEGUARD THE INTEGRITY OF ALL COMPONENTS OF THE MEDICAL DEVICE, IT IS ESSENTIAL TO RESPECT THE TECHNICAL DATA REPORTED ON THE PLATE.

INTENDED USE AND NOT INTENDED USE

Intended use

ATTENTION

SINCE IT WOULD BE IMPOSSIBLE TO DESCRIBE ALL THE OPERATIONS THAT MUST NOT OR CANNOT BE PERFORMED, IT IS CONSIDERED THAT ALL OPERATIONS (OTHER THAN NORMAL) THAT ARE NOT EXPLICITLY DESCRIBED IN THE DOCUMENTATION OF THE MEDICAL DEVICE, ARE NOT TO BE CONSIDERED.

The medical device has been designed and built to be used in the professional field as a support system for patients with mobility difficulties and disabilities that make it difficult and / or impossible to walk and train.

O wheel® is not a classic wheelchair for private use, but a professional tool designed to be left at the customer's disposal within the center. It is intended exclusively for the transport of people. The O wheel® is designed to support a maximum load of 120 kg. O wheel® must always be used under the supervision of an employee of the structure where the chair is left at the disposal of customers.

Unintended use

No use other than those described in the **INTENDED USE paragraph** is envisaged.

- Do not use the medical device if the seat is compromised.
- Do not allow children to use and do not allow them to play on the medical device.
- Avoid sitting violently on the medical device.
- Do not sit, climb, or jump on the backrest, armrests and / or footrest.
- Do not exceed the maximum permitted capacity for any reason.
- Do not place the chair near heat sources, in humid environments or uneven floors.
- Do not rest or stack heavy objects on the chair.
- Do not place the chair near stoves or other heat sources.
- Do not use when the chair is wet.
- Do not tamper with
- The device is not intended to be used independently and by children or non self-sufficient people

- Never use the O wheel® unless accompanied by assistance personnel.
- Before starting to exercise with O wheel® on various gym machines, be sure to apply both brakes to lock the wheels.
- Before getting on or off the O wheel® make sure the brakes are applied.
- Do not get on or off the O wheel® alone.
- Never go up or down hills alone.
- Carefully evaluate the height and compatibility of the seat of the tool to be used.
- Never get off with your feet on the pedals.
- No transit on routes with more than one step.
- Avoid leaning or overbalancing.

The reuse of any part of the medical device after decommissioning relieves the manufacturer of any liability arising from its use.

NOTE

THE MANUFACTURER CANNOT BE HELD IN ANY CASE LIABLE FOR ACCIDENTS OR DAMAGES RESULTING FROM UNINTENDED USE OF THE MEDICAL DEVICE.

RESIDUAL RISKS

Important:
- Make sure that the area of use and maintenance of the medical device has an illumination of at least 200 lux.
- Maintenance must be done only and exclusively by following the instructions in the manual.

Already in the design phase, solutions were adopted aimed at making the use of the medical device safe in all phases of use: transport, adjustment, activity and maintenance. However, not all possible risks for users and the environment have been eliminated, both for technological reasons (reliability of the devices) and management (excessive difficulties in elimination), consequently the residual risks present are reported.

- Do not wash the DM with high pressure liquids
- Do not wash the DM with disinfectants or detergents containing oily substances

Do not put your hands, feet or other parts of the body inside a moving part of the medical device when it is in use. There is a high danger of crushing and / or cutting a limb.

Section 3

Handling
Configuration
Use

HANDLING

It must be kept in mind that, even if carefully protected and packaged, the medical device must be considered fragile and handled with care and attention.

Before moving the O wheel® wheelchair, check the integrity of the same and its parts. If you find any damage, lack, deformation or traces of impacts due, notify the authorized assistance service before proceeding with the following operations.

In particular, check the integrity of:

- Security belt
- Height-adjustable seat
- Backrest
- Push handle
- Forearm positioner
- Steering wheel

Characteristics of the surface on which it can be used

The surface on which the medical device will be used must:

- Be as horizontal as possible. Never use on slopes greater than 8%, the maximum permissible value for platforms for the disabled.

Moving the medical device

The medical device must be handled assembled, a single unit at a time. Details on handling operations are indicated in the following paragraphs.

DANGER

FOLLOW THE SAFETY INSTRUCTIONS WHEN HANDLING THE MEDICAL DEVICE.

Manual handling

The weight of the assembled medical device is indicated in this manual and on the plate applied to it. Given its weight and size, it cannot be lifted manually by a single person.

The chair is equipped with wheels. To move the wheelchair, proceed as follows:

- the rear wheels are equipped with a knob brake; once inserted then the chair is locked. If it is not necessary to move the chair, apply the brake by turning the knob clockwise.
- To move the chair it is necessary to release the brake by turning the knob anticlockwise.
- Be extremely careful when the brake is not applied.
- Make sure that the brake is applied when it is not necessary to move the chair.
- Move the chair by pulling and / or pushing it by holding it by the "push handles".
- The user of the product will be able to move alone thanks to the steering wheels.

CONFIGURATION

Warning

The medical device has been tested and fine-tuned by the manufacturer before being sold.

Before preparing the medical device for use, completely remove any protections and any packaging material. It is complete with all the components necessary for use.

Locations

The area for positioning and using the medical device must meet the following requirements:

- The area of use of the medical device must be chosen so that it cannot be hit by jets of steam, water or other liquids.
- Can be used both indoors and outdoors as long as it is not exposed to atmospheric agents (rain and snow)

Temperature

- In operation: from 0 ° C to 50 ° C.
- Not in operation: from 0 ° C to 50 ° C.
- During storage: from 0 ° C to 50 ° C.

USE

Precautions

To avoid falls and dangerous situations, become familiar with your new wheelchair by using it only on level ground without obstacles. It is also advisable to have a companion present.

Always take the following precautions:

- Never leave children and young people alone in a wheelchair.
- Before using the wheelchair, check that all assembled components are properly fixed.
- The first time you put it into operation, use the wheelchair on level ground with no obstacles. Practice braking and accelerating when driving straight and cornering.
- Always apply the hand brakes before sitting down or getting out of the chair.
- Be careful of padded parts, which can become hot from exposure to direct sunlight and cause burns if touched. Therefore, cover these parts or protect the chair from the sun.
- Do not use the wheelchair improperly to carry multiple people or loads. It only serves to carry one person sitting in the place provided for this purpose.
- Never use the wheelchair under the influence of alcohol or other substances that can affect attention or physical and mental receptivity.
- Note that a shift in balance due to body movements or chair loading may increase the risk of tipping over.
- If you go up or down with a slope of more than 10 degrees, there is an increased risk of tipping backwards or forwards.
- While driving, avoid hitting edges or other obstacles with the unbraked chair.
- Do not jump off obstacles such as edges, steps, etc.
- Do not lean on the footplates or footplates to sit and stand up.
- Make sure that the tread depth of the tires is sufficient (> 1 mm). Before setting off, check the correct operation of the brakes.
- Use O wheel® only in the environments for which it was designed, therefore not on the street or for private domestic use.
- To clean the wheelchair, do not use pressure washers or other similar appliances, harsh or corrosive chemicals, or abrasive products.
- Avoid exposing the wheelchair to direct sunlight or low temperatures for prolonged periods, as certain components of the product (eg frame, footrest, brakes and side panels) can become very hot (> 41 ° C) or very cold (<0 ° C) and, under certain conditions, this can cause skin lesions.
- Also note that with all moving parts (brakes, leg supports, etc.) there is a risk of pinching fingers or other parts of the body. So, be careful in using the wheelchair.
- Move the chair periodically if it has not been used for more than 15 days.

Chair details

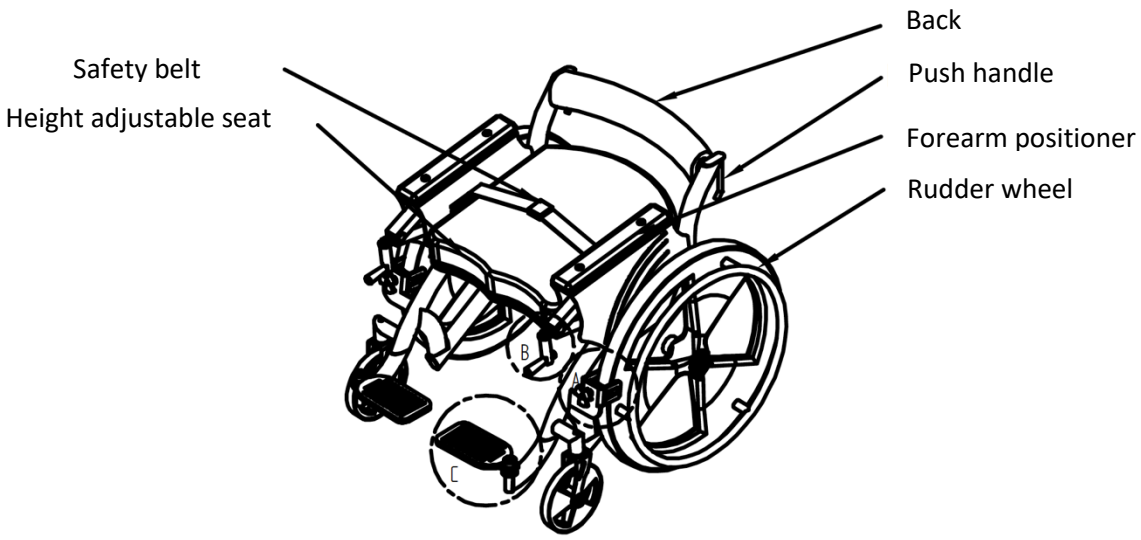

The O wheel® is delivered ready for use, check that all the pieces are present and that they are in excellent condition.

Detail A

Equipped with 2 independent manually controlled brakes, which can be activated by two special cranks.

Brake:
Turn the knob clockwise and counterclockwise

DETAIL A

Before each exercise it is mandatory to brake the two wheels, otherwise there is a risk of overturning.
The knobs on the right and left are used to brake the wheels, turn clockwise brakes the wheel counterclockwise free.

Detail B

The foldable cranks positioned on the right and on the left adjust the seat height.

Crank for adjustment
seat horizontally
Turn the knob clockwise and counterclockwise

DETAIL B

Turn both clockwise to raise and counterclockwise to lower. The two cranks must be turned simultaneously and with the same speed.

Detail C

360 ° swivel footrest.

360 ° swivel footrest

DETAIL C

During the use of O wheel®, for safety reasons it is essential that there is always a companion on assistance.

O wheel® is equipped with 2 solid front 7 '' wheels and 2 solid rear 22 '' wheels with a handrail ring for self-propulsion.

Use procedure

WARNING

During the operation of sitting and getting up from the chair, do not lean on the platforms to get on and off the chair. Always carry out the procedure under the supervision of a room attendant.

Maneuver to sit down

1. Never carry out the maneuver alone, but always ask for the help of a qualified room attendant.
2. Lock the wheelchair with both brakes positioned on the wheels by turning the knobs clockwise until they stop.
3. Unlock the leg supports and rotate them outward
4. If possible, lean the rear wheels of the chair against a sturdy wall.
5. Position yourself as close to the wheelchair as possible, then carefully turn and move towards the chair until you feel your legs touch the edge of the seat.
6. Now grab your hips with both hands and lean against them to support yourself.
7. You can now sit slowly in the chair safely.
8. Now turn the two leg supports back into the correct position.
9. Fasten the existing seat belt.

Driving and braking using the push wheels

To operate and brake the wheelchair, use the push wheels. Make your first attempts carefully and on level ground, with the help of another person, until you are accustomed to your new wheelchair. Be especially careful when overcoming any obstacles. The push wheels attached to the drive wheels are used to move the wheelchair back and forth and to steer it to the left or right. Grasp the push wheels with your hands and turn the wheel forwards or backwards. Place your thumb facing forward and make a fist with the other fingers on the push wheel. To brake, act on the push wheels by sliding them between your hands. To steer, brake the push wheel on the side to which you want to turn or turn. To turn the chair in place, push forward with one hand and backward with the other.

Position yourself in relation to the room machinery present

The special O wheel® wheelchair allows disabled people to train using common isotonic machines on the market. Adjust the machine seat to the minimum height where possible.
Approach with caution and with the help of the room staff, the isotonic machinery present in the structure and position yourself with O wheel® above the seat of the isotonic machinery. Apply the brakes by turning them clockwise. Carry out the exercise carefully, once finished, release the brakes by turning them counterclockwise.

Hand brakes

The wheelchair is equipped with a hand brake on both sides. The hand brakes allow the user to park the wheelchair safely. Apply the hand brakes only when the chair is stationary.

WARNING

operating the wheelchair, be careful not to touch the tire with your thumb and not to touch the brakes.

Safety belt

Always use the seat belt.

Additional backrest

The additional backrest (optional) is used in particular for people who may need more support.

Seat height adjustment

The seat height is adjustable from a minimum of 400 mm to a maximum of 600 mm.
To adjust the height of the O wheel® seat, use the front cranks, turn them clockwise to raise the seat or counterclockwise to lower it at the same time.
This procedure must be performed by the room staff.

Maneuver to get up

To get up from your chair, perform the procedure in reverse order.

Examples of use

WWW.OWHEEL.NET

MADE IN ITALY

Section 5

Maintenance
Deactivation
Disposal

MAINTENANCE

Safety

The medical lighting device (natural and / or artificial) of the maintenance area must ensure the following minimum illuminance value: 200 lux.

Use tools and tools appropriate to the operation you are about to perform.

Interventions on the internal components of the medical device must be carried out by authorized personnel.

For any maintenance, set-up, disassembly and reassembly, etc. in addition to the indications contained in this manual, the general workplace safety regulations in force in the place where these operations are carried out must be observed.

Periodic maintenance

- Periodically it is necessary to clean the structure of the medical device from any accumulation of dust and dirt that may have formed on the external surface. If necessary, use a compressor to blow out the dust. A damp cloth can also be used as long as it is not accompanied by an aggressive chemical product. Clean the leather parts with dedicated detergents.
- Check the integrity of the wheels which, in case of wear, can damage the floor. If necessary, request replacement wheels.
- Periodically check that there are no screws or other loose parts. If not, tighten them as far as they will go.

Ordinary maintenance recommended once a year;
disinfection at each use;
cleaning as needed;
inspection at each use or every month;
lubricate the moving components at least every 6 months and / or if resistance is felt.

Consumer products

- Solid rubber of the wheels
- Bearings
- Brakes
- Forearm positioner
- Seat leather
- Backrest leather
- Mechanical system with vertical lift
- Footrest rubber

ATTENTION

- Never wash with water, detergents and / or liquid and corrosive products
- Ban on the use of abrasive substances, acids, alcohol, chlorine-based detergents, disinfectants and acetone.

Extraordinary maintenance

Extraordinary maintenance is required in cases of breakdowns or breakages due to intense exploitation, unforeseeable accidents or inappropriate use of the medical device.
The situations that may arise from time to time are completely unpredictable and therefore it is not possible to describe appropriate intervention procedures.
If necessary, consult the technical service to receive the appropriate instructions for the situation.
Extraordinary interventions still require good working experience in the mechanical sector, and in the presence of such experience, they can be performed by consulting the diagrams and drawings attached to this documentation.
In any case, before starting an extraordinary intervention, always consult the manufacturer to confirm the correctness of the planned intervention.

All ordinary or extraordinary mechanical interventions must in any case be carried out by specialized personnel (see AUTHORIZED ASSISTANCE).

PUTTING OUT OF SERVICE and DISPOSAL

Disposal of packaging

All materials are compatible with the environment and recyclable. Please make your contribution to the conservation of the environment, using the appropriate separate collection channels.

Disposal

The construction materials of the medical device do not require special disposal procedures. If so, refer to the local regulations for the disposal of its materials and components.

Contact specialized waste collection centers for the correct disposal procedures for the medical device and its components.

The possibility of reusing some parts of the medical device, both as mechanical units and as raw materials for other constructions, is subject to the total responsibility of the user.

NOTE

THE MANUFACTURER IS IN NO WAY RESPONSIBLE FOR DAMAGES CAUSED BY THE MEDICAL DEVICE IF NOT USED IN THE INTEGRAL VERSION AND FOR THE USES AND METHODS OF USE SPECIFIED IN THIS MANUAL. THE MANUFACTURER IS IN NO WAY RESPONSIBLE FOR ANY DAMAGE TO PERSONS OR THINGS RESULTING FROM THE RECOVERY OF PARTS OF THE MEDICAL DEVICE USED AFTER ITS DISPOSAL.